RevNo	Revision note	Date	Signature	Checked

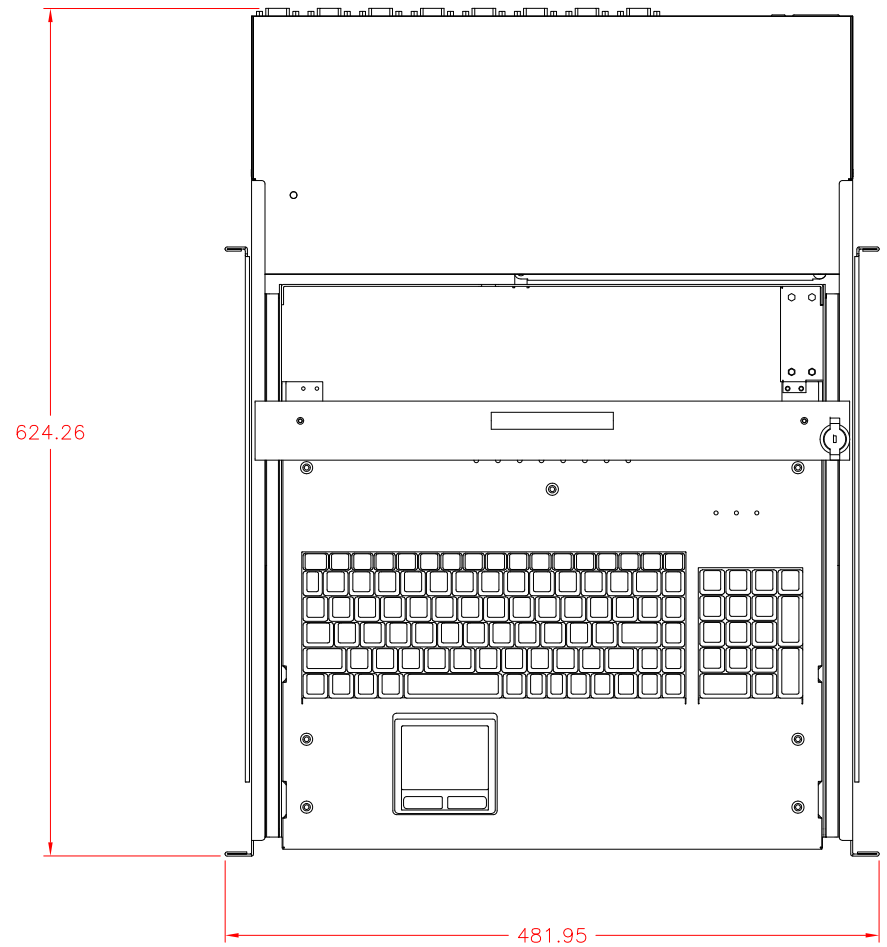

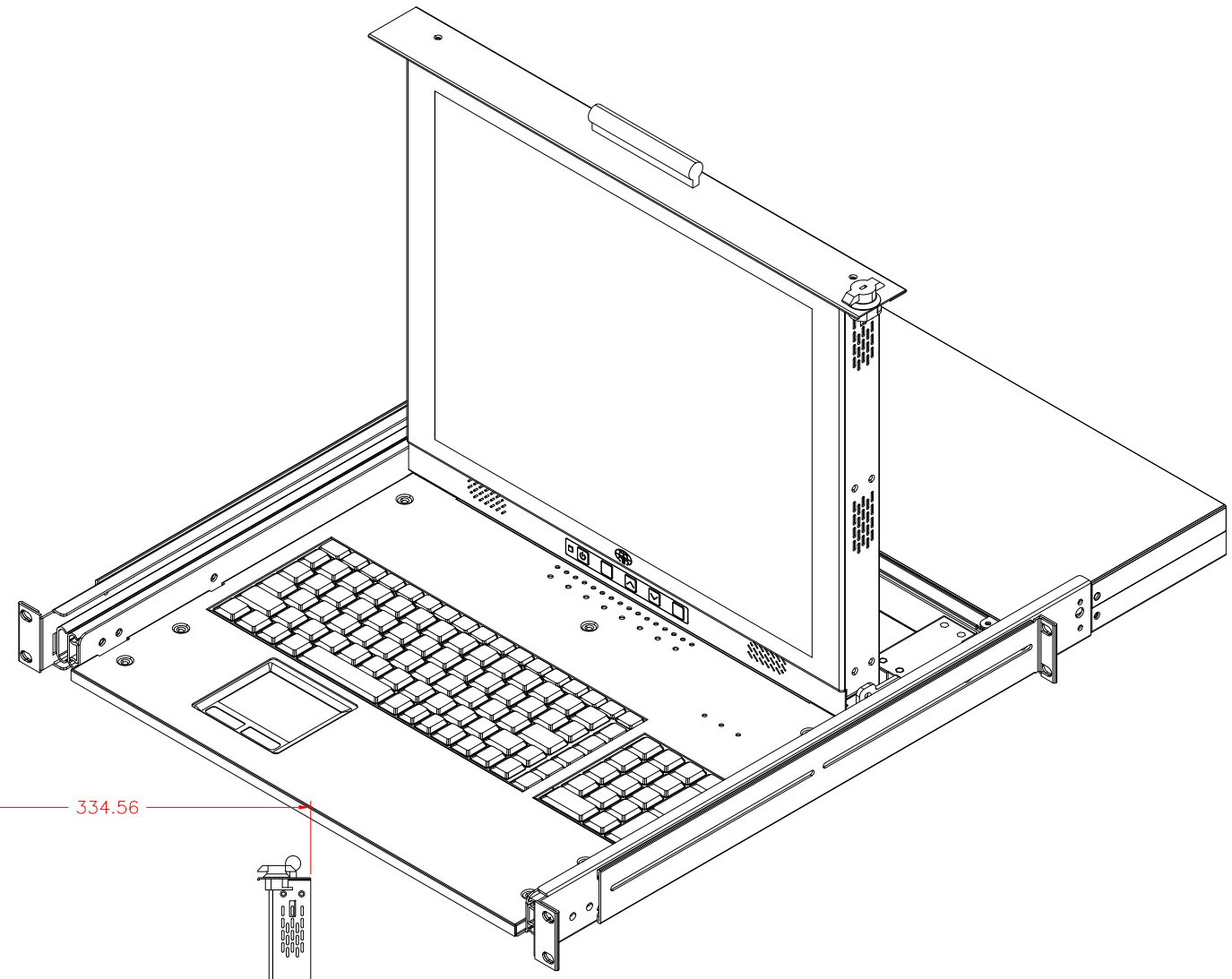

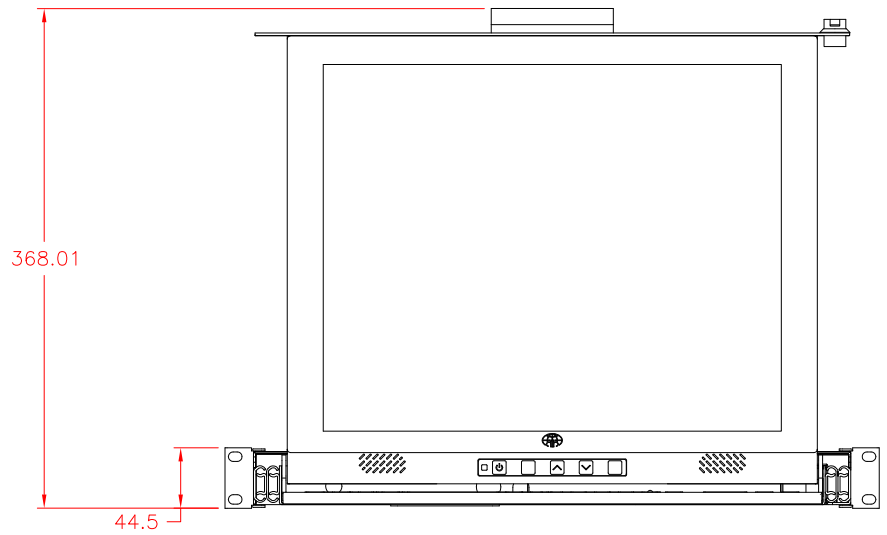

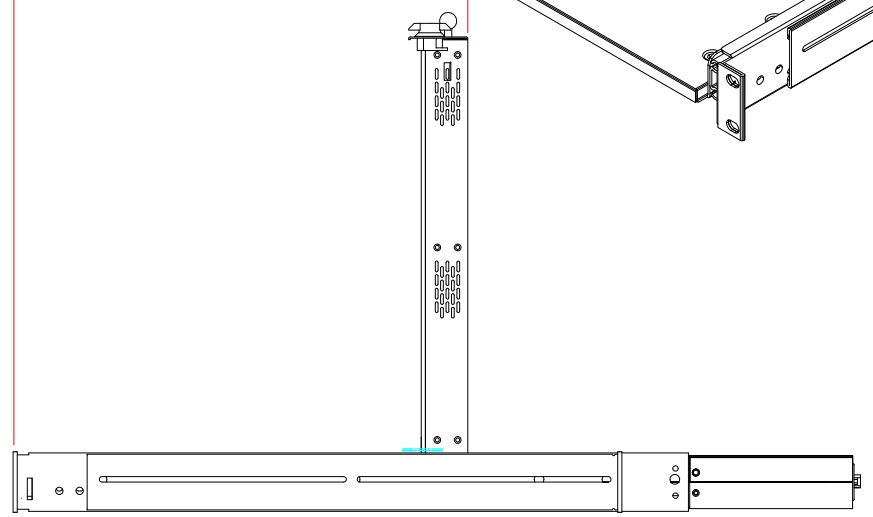

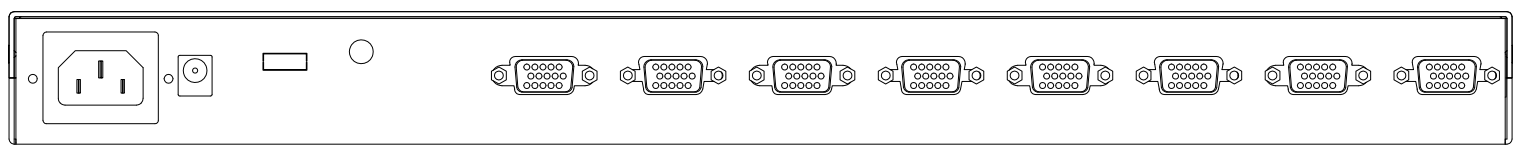

Itemref	Quantity	Title/Name, designation, material, dimension etc			Article No./Reference
Designed by ××××		Checked by _____	Approved by - date _____ - 2013/05/25	Filename XXX	Date 2013/05/25	Scale 0:0

Atlas Top Net Co., Ltd.

ATN

www.atlastopnet.com

Edition 0

Sheet 1/1